镜头
使用说明书

SAMSUNG 10 mm F3.5 Fisheye

此说明书专门为指导您了解镜头基本功能和特征而设计。
为保证安全、正确地使用，请仔细阅读此说明书。

AD68-08101A (1.1)

A

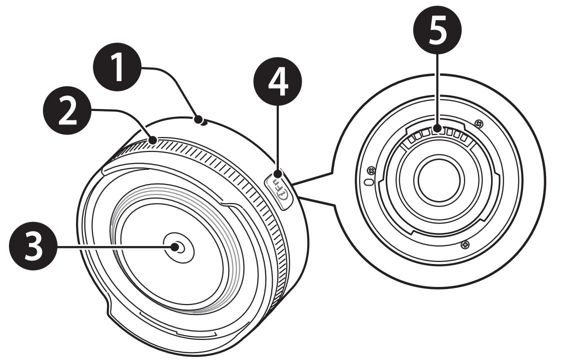

B

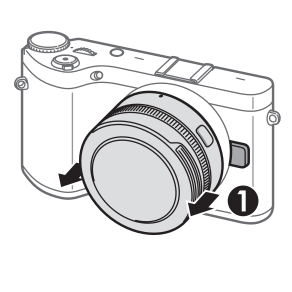

E

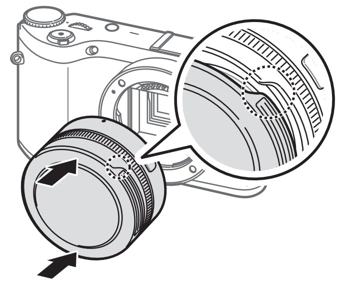

C

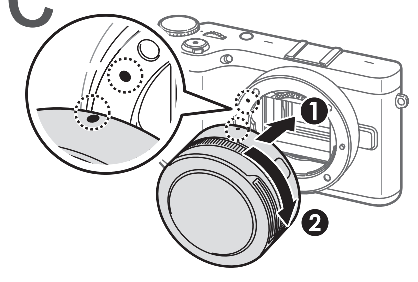

F

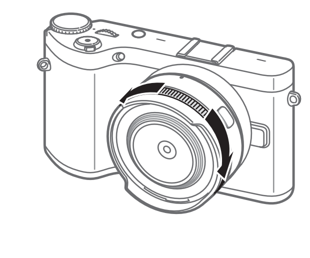

D

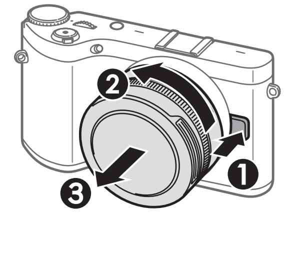

G

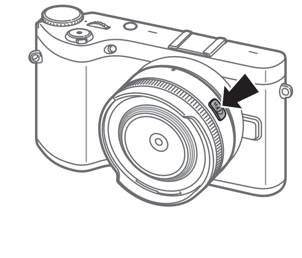

适合从独特和趣味视角拍摄的镜头 [简体中文]

使用本产品前

感谢您购买三星镜头。此说明书中描述的一些功能可能不可用。更新相机机身和镜头的固件。请访问 www.samsung.com 以下载固件。

拆开包装

镜头，镜头盖，镜头接口盖，镜头包，使用说明书

各部位名称（见图 A）

❶ 镜头连接指示 ❷ 对焦圈 ❸ 镜头 ❹ i-Function 按钮
❺ 镜头信息触点

连接和移除镜头

▶ 要安装镜头，

1 卸下镜头盖、镜头接口盖和机身盖。
- 抓住镜头盖的外缘并将其从镜体拔出，卸下镜头盖。（见图 B）

2 将相机机身红色标记对准镜头红色标记。然后如图所示旋转镜头，直到其锁定到位（见图 C）

▶ 要卸下镜头，按住镜头释放按钮，然后如图所示旋转镜头。（见图 D）
- 对准镜头和镜头盖上的凹槽，然后将镜头盖按进镜体，直至卡入到位。（见图 E）

使用对焦环（见图 F）

在 MF 模式中，可通过旋转镜头上的对焦环来手动调整对焦。可以在相机上选择 MF 模式。

> 设定 MF 辅助功能以协助手动对焦。有关更多详细信息，请参阅相机说明书。

使用 i-Function

按下镜头上的 i-Function 按钮时，可以选择 ⓘDepth 以调整景深或选择 ⓘZoom 以放大拍摄对象。也可调整某些拍摄选项。此功能仅在相机支持 i-Function 时可用。可用选项可能因拍摄模式不同而各异。

1 将模式旋钮旋转到 **P**、**A**、**S**、**M** 或 ⓘ。

2 按镜头上的［**i-Function**］选择一个设置。（见图 G）
- 可用设置可能因拍摄模式不同而异。

设置	拍摄模式	设置	拍摄模式
ⓘDepth	ⓘ	光圈值	A、M
ⓘZoom	P、A、S、M、ⓘ	曝光值	P、A、S
快门速度	S、M	白平衡，ISO	P、A、S、M

3 旋转镜头上的对焦环来调整设置（或在 ⓘZoom 模式中更改变焦率）。

> - 若想选择在您按下镜头上的 i-Function 按钮时显示的项目，可使用相机上的 **iFn 自定义**菜单。
> - 使用 ⓘZoom 并旋转对焦环时，照片分辨率会因变焦率的不同而异。

拍摄

1 将鱼眼镜头安装到相机。

2 调整对焦。
- 在相机上设置对焦方法。
  自动对焦 (AF)：相机会在您半按快门时自动调整对焦。
  手动对焦 (MF)：可以通过旋转镜头上的对焦环来手动调整对焦。

3 拍摄照片。

> - 鱼眼镜头会产生强烈的视觉失真，使影像产生凸面外观。通过鱼眼镜头拍摄的照片边缘可能呈现黑色。为弥补色差，请将光圈值调高一到两阶。
> - 使用鱼眼镜头时不可安装滤镜。

规格

- **镜头名称**：SAMSUNG 10 mm F3.5 Fisheye
- **焦距**：10 mm（在 35 mm 格式中相当于 15.4 mm）
- **镜头构成**：5 组，7 元件（附带1个非球面镜头）
- **查看角度**：180˚
- **光圈**：F3.5（最小：F22），（叶片数：7，圆孔径光栏）
- **接口类型**：三星 NX 接口 （NX 系列专用）
- **光学图像稳定**：不支持
- **最小对焦范围**：0.09 m
- **最大放大倍率**：约 0.22 X
- **i-Scene**：支持（风景，夕阳，黎明，海滩与雪景，夜景，逆光）
- **最大直径×长度**：58.8 X 26.3 mm
- **重量**：约 72 g
- **操作温度**：0 - 40° C
- **操作湿度**：5 - 85 %

健康与安全信息

使用镜头前请仔细阅读下列安全注意事项。

警告	• 不要通过镜头或相机看太阳。否则可能会严重损伤您的眼睛。 • 使您的镜头或相机远离儿童和宠物。
注意	• 不要在未安装镜头盖的情况下，将镜头放在阳光直射的地方。直射的阳光通过镜头后聚焦在易燃物上可能导致火灾。 • 请仅使用坚固的三脚架。轻型或不稳定的三脚架可能会倒塌并损坏相机。

镜头的存储和维护

- 请在干燥、通风的地方存放镜头。
- 请勿将镜头存放在温度或湿度过高的区域，或者放置于壁橱、车辆或存放化学品的密闭区域。
- 镜头没有防水功能，在水附近使用时，小心不要弄湿镜头。
- 不要使用任何化学药品如稀释剂、酒精或苯擦镜头的灰尘。
- 镜头是精密光学设备，小心不要掉落或受到其他物体的撞击。
- 避免在温度频繁变化的地方使用镜头，将镜头放在塑料袋或相机包，防止镜头内外会产生水珠。
- 携带或不使用镜头时，请在镜头上装上镜头盖和镜头接口盖，以免镜头被异物污染或被划伤。
- 不要把没带镜头盖的相机放在三脚架上，相机内部零件可能被直射的阳光损坏。
- 为保持镜头性能，每一年或两年检查一次。
- 不要对镜头前面施加外力。
- 为了安全地使用镜头，请在电源关闭的状态下安装或拆卸镜头。
- 对于使用其他公司镜头造成的任何损坏，三星不承担任何责任。
- 在安装镜头时，确保仅在清洁的环境更换镜头并且不要将手指伸到镜头接口中。如果有异物进入相机机身或镜头，可能会影响拍摄效果或导致故障。

Planet First RoHS Compliant

PlanetFirst 体现三星通过生态导向业务与管理活动，对于持续发展与社会责任的承诺。

10

□ 产品名: 镜头(Lens)
□ 环保使用期限:10年
— 只有按照本产品使用说明书中的方法正常使用时，环保使用期限才能有效

部件名称	有毒有害物质或元素					
	铅 (Pb)	汞 (Hg)	镉 (Cd)	六价铬 (Cr6+)	多溴联苯 (PBB)	多溴二苯醚 (PBDE)
镜头/LENS	×	○	○	○	○	○

○: 表示该有毒有害物质在该部件所有均质材料中的含量均在SJ/T 11363-2006规定的限量要求以下。
×: 表示该有毒有害物质至少在该部件的某一均质材料中的含量超出SJ/T 11363-2006规定的限量要求 。
注: 超过限量要求的部件皆因全球技术发展水平而无法实现有毒有害物质或元素的替代，但是 Samsung 正为了开发替代技术而努力。(资料公开基准:供应商提供的成绩书，Samsung 检测结果)

中国制造 天津三星光电子有限公司
中国 天津津港公路微电子工业区张衡道9号

保留备用

A

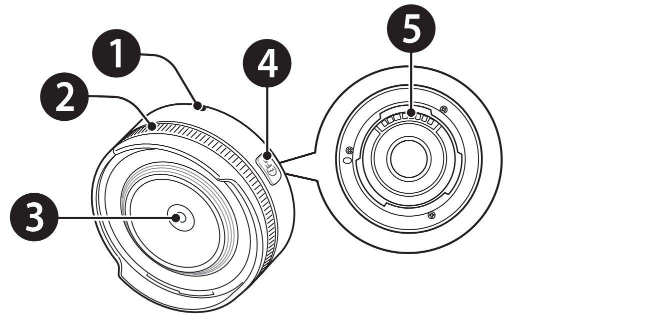

B

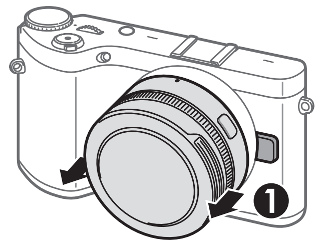

C

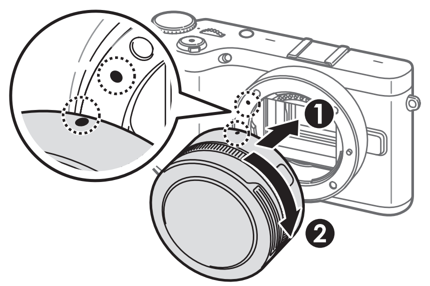

D

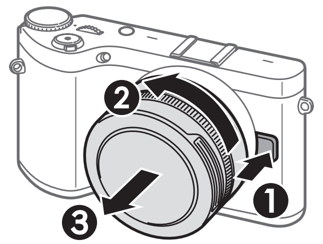

E

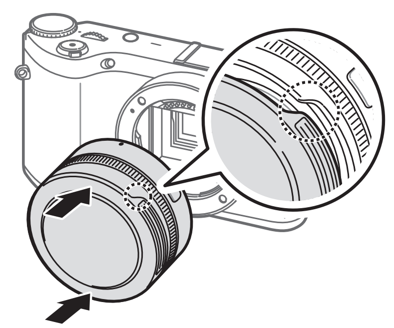

F

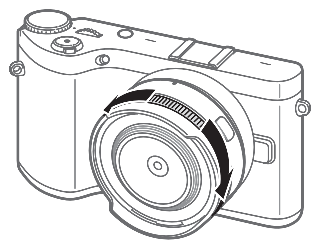

G

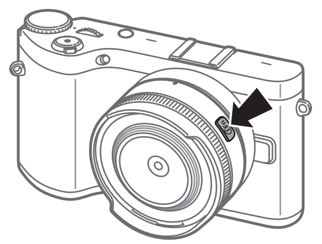

LENS FOR A UNIQUE AND FUN PERSPECTIVE

[English]

Before Using This Device

Thank you for purchasing the Samsung Lens. Some functions described in this manual may not be available depending on the camera model. Update the firmware of the camera body and lens. Visit www.samsung.com to download the firmware.

Unpacking

Lens, Lens cap, Lens mount cover, Case, User manual

Layouts (See illustration A)

❶ Lens mount index ❷ Focus ring ❸ Lens
❹ i-Function button ❺ Lens information contacts

Attaching and Removing the Lens

► To attach the lens,

1 Remove the lens cap, lens mount cover, and body cap.
- Grab the outer edge of the lens cap and pull it away from the lens body to detach it. (See illustration B)

2 Align the red mark on the lens with the red mark on the camera body. Then, rotate the lens as shown in the illustration until it locks into place. (See illustration C)

► To remove the lens, press and hold the lens release button, and then rotate the lens as shown in the illustration. (See illustration D)
- Align the grooves on the lens and the lens cap and then push the cap toward the lens body until it clicks into place. (See illustration E)

Using the focus ring (See illustration F)

In the MF mode, adjust the focus manually by rotating the focus ring on the lens. You can select the MF mode on the camera.

> Use the MF Assist function on the camera to aid with manual focusing. Refer to your camera manual for more details.

Using i-Function

When you press the i-Function button on the lens, you can select ⓘ Depth to adjust the depth of field or select ⓘ Zoom to zoom in on a subject. You can also adjust some shooting options. This feature is available only when your camera supports i-Function. Available options may differ depending on shooting modes.

1 Rotate the mode dial to **P**, **A**, **S**, **M**, or ⓘ.

2 Press [**i-Function**] on the lens to select a setting. (See illustration G)
- Available settings may differ depending on the shooting mode.

Setting	Shooting mode	Setting	Shooting mode
ⓘ Depth	ⓘ	Aperture value	A, M
ⓘ Zoom	P, A, S, M, ⓘ	Exposure value	P, A, S
Shutter speed	S, M	White Balance, ISO	P, A, S, M

3 Rotate the focus ring on the lens to adjust the setting (or to change the zoom rate in ⓘ Zoom mode).

> - To select the items that will appear when you press the i-Function button on the lens, you can use the **iFn Customizing** menu on your camera.
> - When you use ⓘ Zoom and rotate the focus ring, the photo resolution will vary according to changes in the zoom rate.

Shooting

1 Attach the Fisheye lens to the camera.

2 Adjust the focus.
- Set the focus method on the camera.
  Auto Focus (AF): The focus is adjusted automatically when you half-press the shutter.
  Manual Focus (MF): The focus can be adjusted manually by rotating the focus ring on the lens.

3 Capture a photo.

> - The Fisheye Lens produces strong visual distortion to give images a convex appearance. The edges of photos taken with a fisheye lens may be dark. To offset this, adjust the aperture value one or two steps higher.
> - You cannot attach a filter when you use a Fisheye Lens.

Specifications

- **Lens Name**: SAMSUNG 10 mm F3.5 Fisheye
- **Focal length**: 10 mm (equivalent to 15.4 mm in 35 mm format)
- **Elements in Group**: 7 elements in 5 groups (1 Aspherical lens included)
- **Angle of View**: 180°
- **Aperture**: F3.5 (Min. F22), (Number of Blades: 7, Circular Aperture Diaphragm)
- **Mount Type**: Samsung NX Mount (Exclusive to NX series)
- **Optical Image Stabilizer**: Not Supported
- **Minimum Focus Distance**: 0.09 m
- **Maximum Magnification**: Approx. 0.22X
- **i-Scene**: Supported (Landscape, Sunset, Dawn, Beach & Snow, Night, Backlight)
- **Max. Diameter X Length**: 58.8 X 26.3 mm
- **Weight**: Approx. 72 g
- **Operating Temperature**: 0–40 °C
- **Operating Humidity**: 5–85 %

Health and Safety Information

Please read the following safety tips carefully for proper and safe use.

Warning	• Do not stare at the sun through the lens or camera. This may cause severe damage to your eyes. • Keep your lens or camera away from small children and pets.
Caution	• Do not store the lens in direct sunlight without the lens cap. Direct sunlight that passes through the lens may combust if it comes into contact with flammable materials. • Use only sturdy tripods. Lightweight or unstable tripods may fall over and damage the camera.

Lens Storage and Maintenance

- Store the lens in dry and well ventilated areas.
- Do not store the lens in areas of high temperature or humidity or in a closet, car, or confined area where chemicals are stored.
- The lens is not waterproof. Be careful not to allow it to get wet when using it near water.
- Do not use chemicals such as thinner, alcohol, or benzene to remove dust.
- Do not drop the lens or apply excessive shock to it. The lens is a precise optical product.
- Avoid using the lens anywhere there is a sudden temperature change. Keep the lens in a plastic bag or a camera case to prevent condensation from forming on the inside or outside of the lens.
- When carrying or not using the lens, place the lens cap and lens mount cover on the lens to prevent contamination from foreign particles and protect the lens from scratches.
- Do not keep the camera mounted on a tripod without the lens cap. The inside of the camera can be damaged by direct sunlight.
- Check the lens once every year or two for best performance.
- Do not apply excessive force to the front of the lens.
- For safe use of the lens, mount or dismount the lens while the camera is turned off.
- Samsung is not responsible for any damage incurred by using other manufacturers' lenses.
- Make sure to change lenses only in a clean environment and do not put your fingers into the lens mount when mounting the lens. Foreign particles may affect shooting results or cause a malfunction if they enter the camera body or the lens.

Correct Disposal of This Product
(Waste Electrical & Electronic Equipment)
(Applicable in countries with separate collection systems)

This marking on the product, accessories or literature indicates that the product and its electronic accessories (e.g. charger, headset, USB cable) should not be disposed of with other household waste at the end of their working life. To prevent possible harm to the environment or human health from uncontrolled waste disposal, please separate these items from other types of waste and recycle them responsibly to promote the sustainable reuse of material resources. Household users should contact either the retailer where they purchased this product, or their local government office, for details of where and how they can take these items for environmentally safe recycling. Business users should contact their supplier and check the terms and conditions of the purchase contract. This product and its electronic accessories should not be mixed with other commercial wastes for disposal.

Planet First RoHS Compliant

PlanetFirst represents Samsung Electronics' commitment to the sustainable development and social responsibility through eco-driven business and management activities.

Please refer to the warranty that came with your product or visit our website www.samsung.com for after-sales service or inquiries.